G51MES-P07QF00-0080

ODU MEDI-SNAP®

Receptacle with break-away and push-pull locking for front or rear panel mounting

Size: 1, IP50, Keying: E, Number of contacts: 7, PCB, Contact type: Sockets, Signal

Basic information

Part number	G51MES-P07QF00-0080
Category	Connector
Type of connector	Receptacle
Assembly situation	Front panel mounting, Rear panel mounting
Size	1

Contact insert description

Special features	IEC 60601-1 (1 MOPP & 2 MOOP)
Transmission type	Signal
Number of contacts	7
Contact type	Sockets
Contact diameter	0.7 mm
Termination type	PCB
Termination diameter	0.5 mm

Reverse gender on request

Technical information

Nominal current single contact	6 A	IEC 60512-5-2:2002 (DIN EN 60512-5-2:2003)
Max. current insert	3.9	VDE 0298-4:2003
Test voltage	1.1 kV AC	EIA-364-20F:2019-02
Max. creepage distance (contact to contact)	0.85 mm (Contact to contact)	
Max. creepage distance (contact to housing)	IEC 60601-1: 1MOPP. 2MOOP*	
Max. clearance distance (contact to contact)	0.85 mm (Contact to contact)	
Max. clearance distance (contact to housing)	IEC 60601-1: 1MOPP. 2MOOP*	

All shown connectors are rated to a safety extra low voltage (SELV) of less than 50 V AC / 75 V DC, according to IEC 61140:2016 (VDE 0140-1:2016) Protection against electric shock - Common aspects for installation and equipment. In case other standards rule a specific use of the connector, the application specific safety criteria shall be considered first. In this context, lower voltage ratings may be valid. Warning: Danger to life for operating voltages above 50 V AC / 120 V DC!
* As per IEC 60601-1:2012 (VDE 0750-1:2013-12). Max working voltage of the medical electrical device 250 V AC (degree of pollution 2).

Mechanical and environmental data

Locking principle	Break-Away , Push-Pull
Keying	E
Mating cycles	5000
IP class	IP50
Max. operating temperature	120 °C
Min. operating temperature	50 °C

*mated & unmated condition

Material and surface treatments

Material	PEI black
Insulator material	PEEK
Contact material	Cu-alloy with gold finish
Color option (Front or back nut)	Black

Insulator materials MEDI-SNAP®

	Standard	PEEK
Flammability rating	UL 94	V-0/1.5
Operation temperature		-50 to +250 °C
Dielectric strength	IEC 60243-1:2013 (VDE 0303-21:2014)	19 kV/mm
Comparative figure of the creep resistance CTI	IEC 60112: 2009 (VDE 0303-11:2010)	175
Water absorption	ASTM D 570:1998 / ISO 62:2008	0.1 %
Insulation resistance	IEC 60512-3-1:2002 (DIN EN 60512-3-1:2003-01)	> 1 x 10^{12} Ω

ODU reserves the right to make changes based on the current state of knowledge without prior notice without being obliged to provide replacement deliveries or refinements of older designs.
All shown connectors are defined without breaking capacity (COC) according to IEC 61984:2008 (VDE 0627:2009).

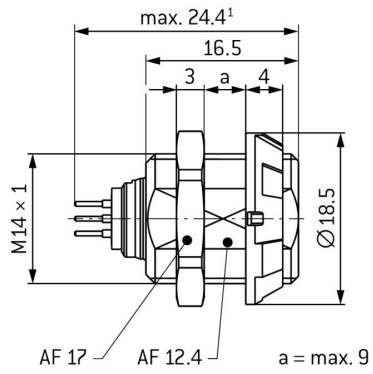

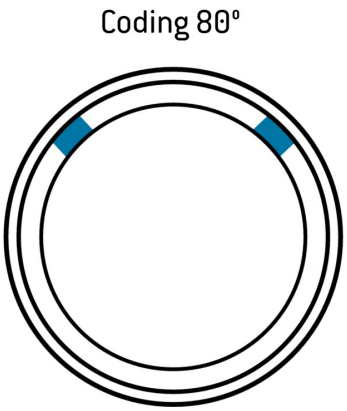

POSITIONS: 7 Positions

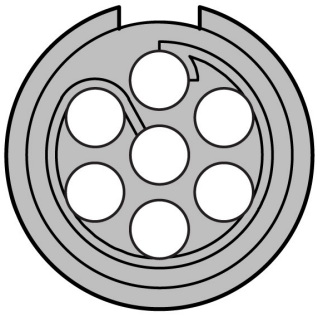

PCB-LAYOUT:

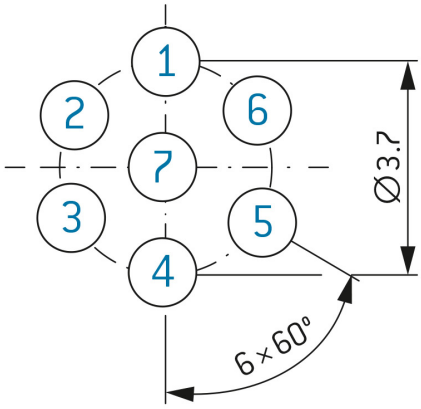

Borehole 0.6 mm

PANEL CUT OUT:

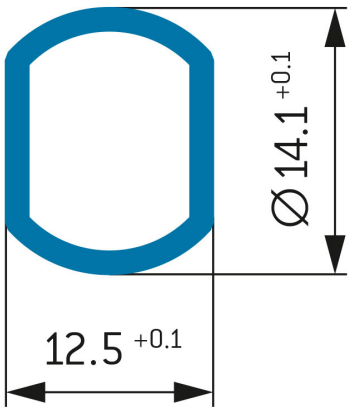

PCB Layout with socket contacts: Top view (from component side). Unless otherwise numbered, numbering starts at the contact marked by the bracket and follows the spiral clockwise.

Further technical information and downloads

3D-File (STP File)